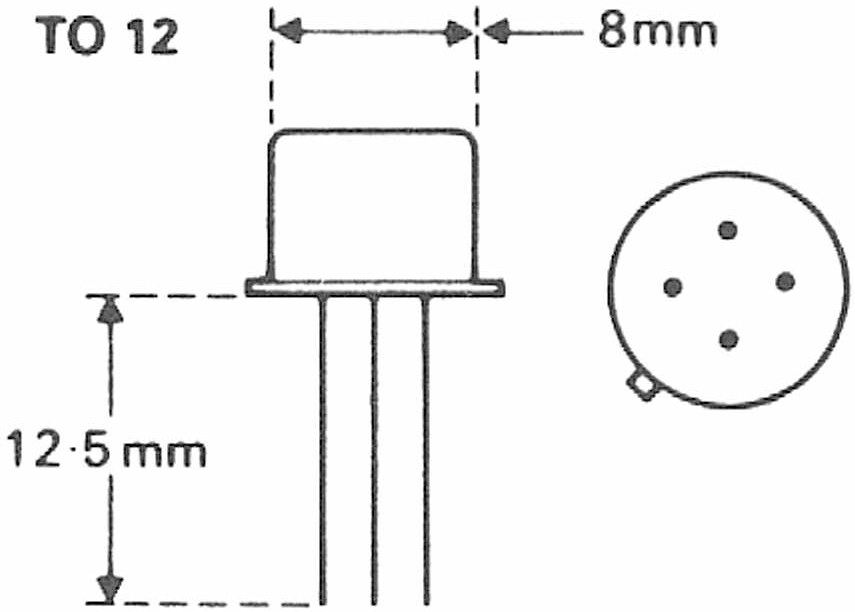
TO 12
8mm
12·5mm